Markus RS-30

Assembly manual

Menrex
Display it!

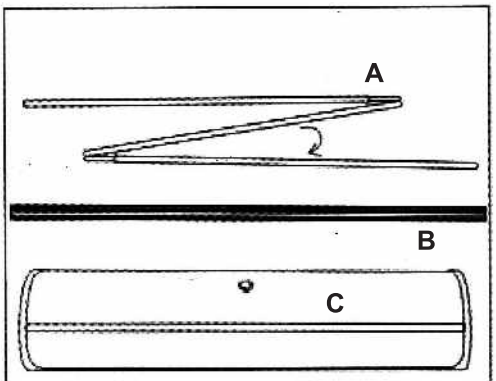

Product set: three part pole **A**, "Click" poster holder **B** and promotional stand **C**.

1

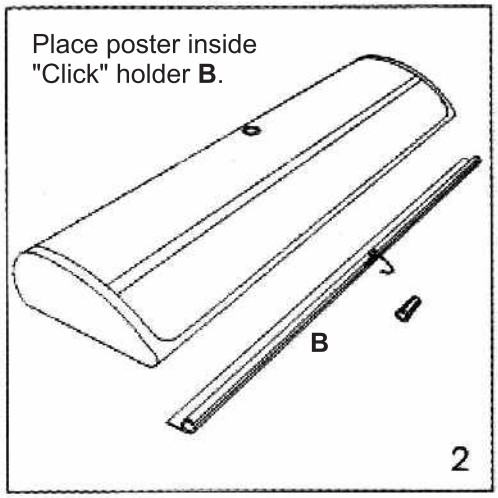

Place poster inside "Click" holder **B**.

2

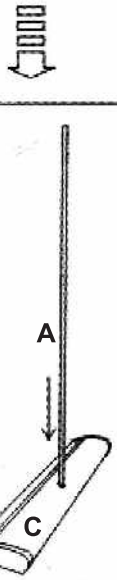

Place three part pole in to stand.

3

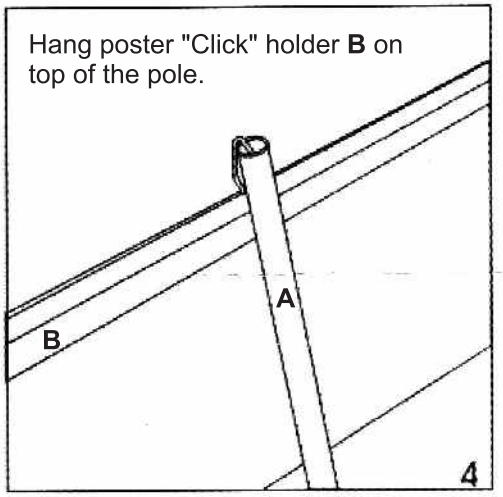

Hang poster "Click" holder **B** on top of the pole.

4

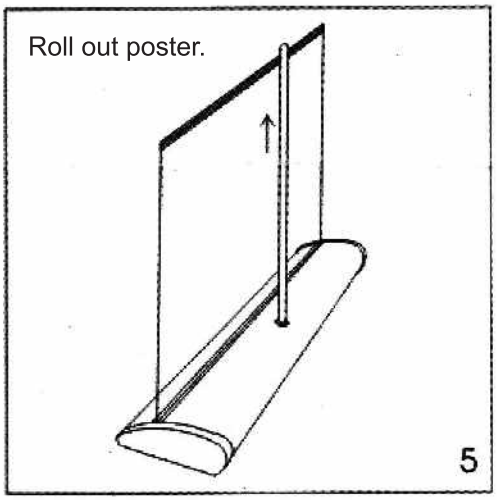

Roll out poster.

5

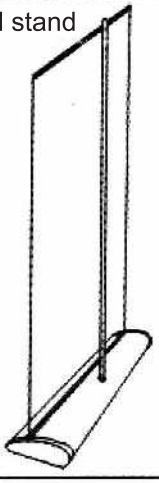

Promotional stand is prepared for using.

6

Dissasamble counter doing those actions in backwards. Roll in plastic poster printed side out.

www.menrex.com